ANNEX 2 A

CLASS 2 SPECIFICATIONS

THE CHASSIS
The yacht, fully rigged with a pilot in the cockpit, must not pass between two vertical posts with a 3.65 m gap between them.

LENGTH OF BODY
The minimum length of the load bearing portion of the body is 4.15 metres (see drawing).

THE SAIL AREA
The maximum total propulsive area, i.e. sail + mast + boom, is 11.3 sq.m. and minimum 8 sq.m..

THE MAST
A fluorescent orange strip, 40 mm wide and minimum 2 m long, is stuck on the leading edge of the mast. [1]

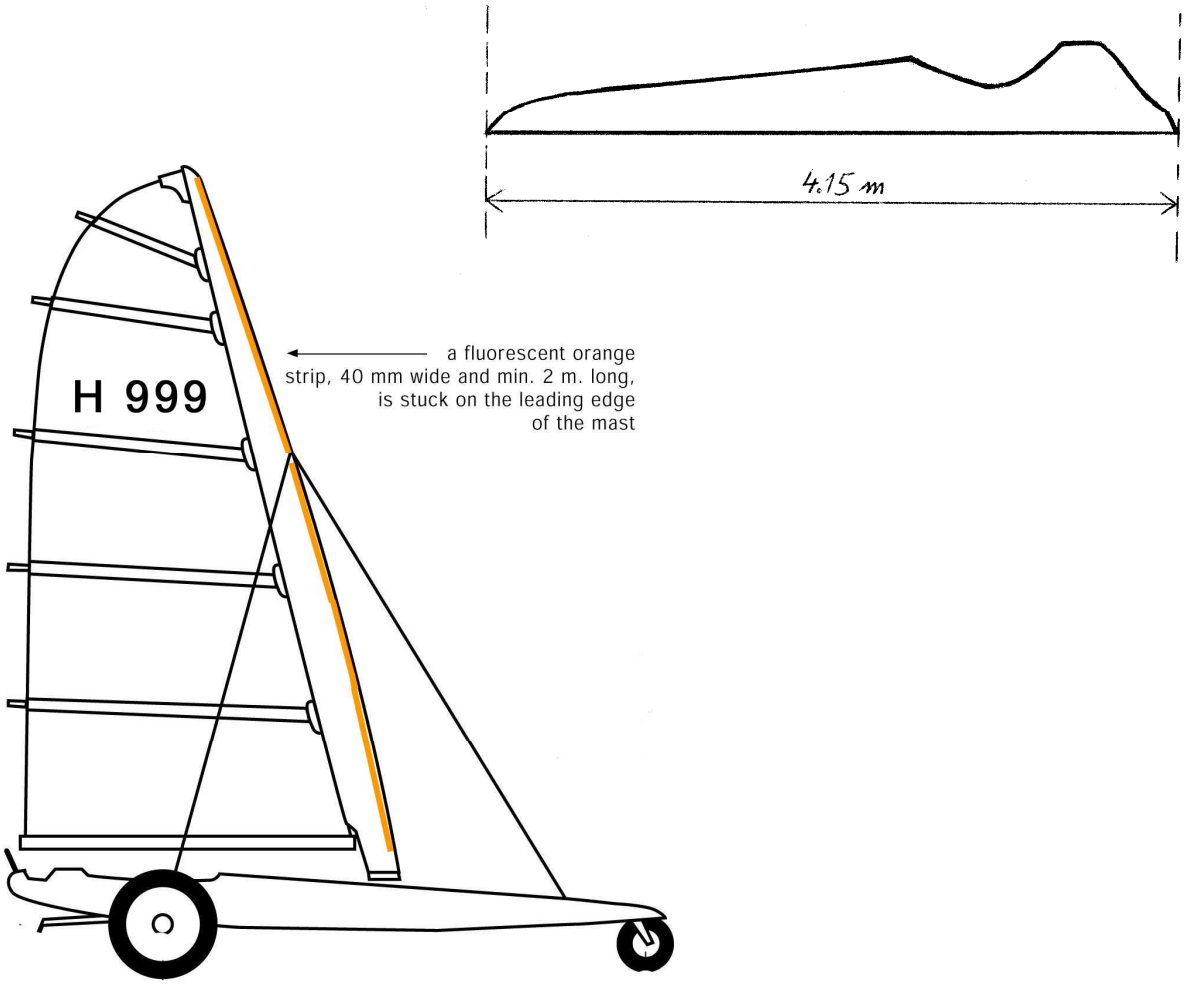

[1] FGA 25/09/05

ANNEX 2 B 1

CLASS 3 SPECIFICATIONS

If any one of the following items does not conform to the specifications, then the yacht is not considered as a class 3.

THE MAST
The length of the mast is limited to 6.10 metres **[1] including all parts. [2]**

A fluorescent orange strip, 40 mm wide and minimum 2 m long, is stuck on the leading edge of the mast.

THE CHASSIS
a. MAXIMUM TRACK : The yacht, fully rigged with a pilot in the cockpit, must pass between two vertical posts with a 3.5 m gap between them.
b. WHEEL BASE : the distance between the axle of the front-wheel and the axle of the rear wheels must not exceed 3.8 m.

STEERING MECHANISM
a. STEERING SHACKLES must be of stainless steel, minimum 5 mm diameter, and locked with wire.
b. STEERING CABLES must be of stainless steel, minimum 4 mm diameter, and must be fastened with ferrules and thimbles, or swaged on terminals.
c. CABLE TENSIONERS (e.g. bottle screws) must be of stainless steel, minimum 6 mm diameter, with a safety system to prevent looseness (wire or locking nuts).

BRAKE
An efficient brake will be fitted.

AREA
The maximum total propulsive area, (sail + mast + boom), is 7.35 sq.. m.

WEIGHT
The total weight, fully rigged, but without the pilot and without any ballast, will be a minimum of 100 kg.

ROLL BAR
A roll bar must be fitted to the yacht. It may however be replaced by an equivalent construction of the yacht body. In each case, roll bar or body, it must extend a minimum of 10 centimetres above the crash helmet of the pilot in the sailing position.

[1] FGA 5/10/97
[2] FCM 10/06/06

FISLY ANNEX 2 B1 (bis)

CLASS 3 RESTRICTION SPECIFICATIONS (C III-R)

FISLY annex regulation n.12 article 7 point g. applies for all international races where class 3 restriction yachts participate. Class 3 Restriction forms part of Class 3. If any one of the following items do not conform to the specifications the yacht is not considered as a Class 3 Restriction.

THE MAST

A fluorescent orange strip, 40 mm wide and minimum 2 m long, is stuck on the leading edge of the mast. The length of the mast is limited to 5.00 metres. The width (leading edge to trailing edge) is limited to 0.30 metres maximum. In any position the mast must enter in a gauge of 5 metres long limited by two projecting squares of 30 cm long. **[1]**

THE CHASSIS

a) MAXIMUM TRACK : The yacht, fully rigged with a pilot in the cockpit, must pass between two vertical posts with a 3.5 m gap between them.
b) WHEEL BASE : the distance between axle of the front-wheel and the axle of the rear wheels must not exceed 3.8 m.
c) MAXIMUM HEIGHT: the highest part of the yacht may not be higher than the top of the mast with the exception of any wind indicator. The maximum height of the lowest point of the mast is 70 cm measured from the ground. The sail (boom included) when sheeted in at maximum, must not become lower than the lowest point of the mast, projected horizontally over the whole length of the yacht. **[1]**
d) DIAMETER OF THE WHEELS: the diameter of the wheels with tyres fitted and inflated to 1.5 kg/cm³, must not exceed 0.70 m. **[1]**

STEERING MECHANISM

a) STEERING SHACKLES must be of stainless steel, minimum 5 mm diameter, and locked with wire.
b) STEERING CABLES must be of stainless steel, minimum 4 mm diameter, and must be fastened with ferrules and thimbles, or swaged on terminals.
c) CABLE TENSIONERS (e.g. bottle screws) must be of stainless steel, minimum 6 mm diameter, with safety system to prevent looseness (wire or locking nuts). The steering mechanism must not content any textile ropes**. [1]**

BRAKE

An efficient brake will be fitted.

AREA

The maximum total propulsive area, (sail + mast + boom), is 7.35 sq.. m.

WEIGHT

The total weight, fully rigged, without the pilot and without any unfixed ballast, will be a min. of 110 kg. **[1]**

ROLL BAR

A roll bar must be fitted to the yacht. It may however be replaced by an equivalent construction of the yacht body. In each case, roll bar or body, it must extend a minimum of 10 centimetres above the crash helmet of the pilot in the sailing position

[1] F.G.A. 22/10/95

ANNEX 02 B2 : CLASS 3 SPECIFICATION

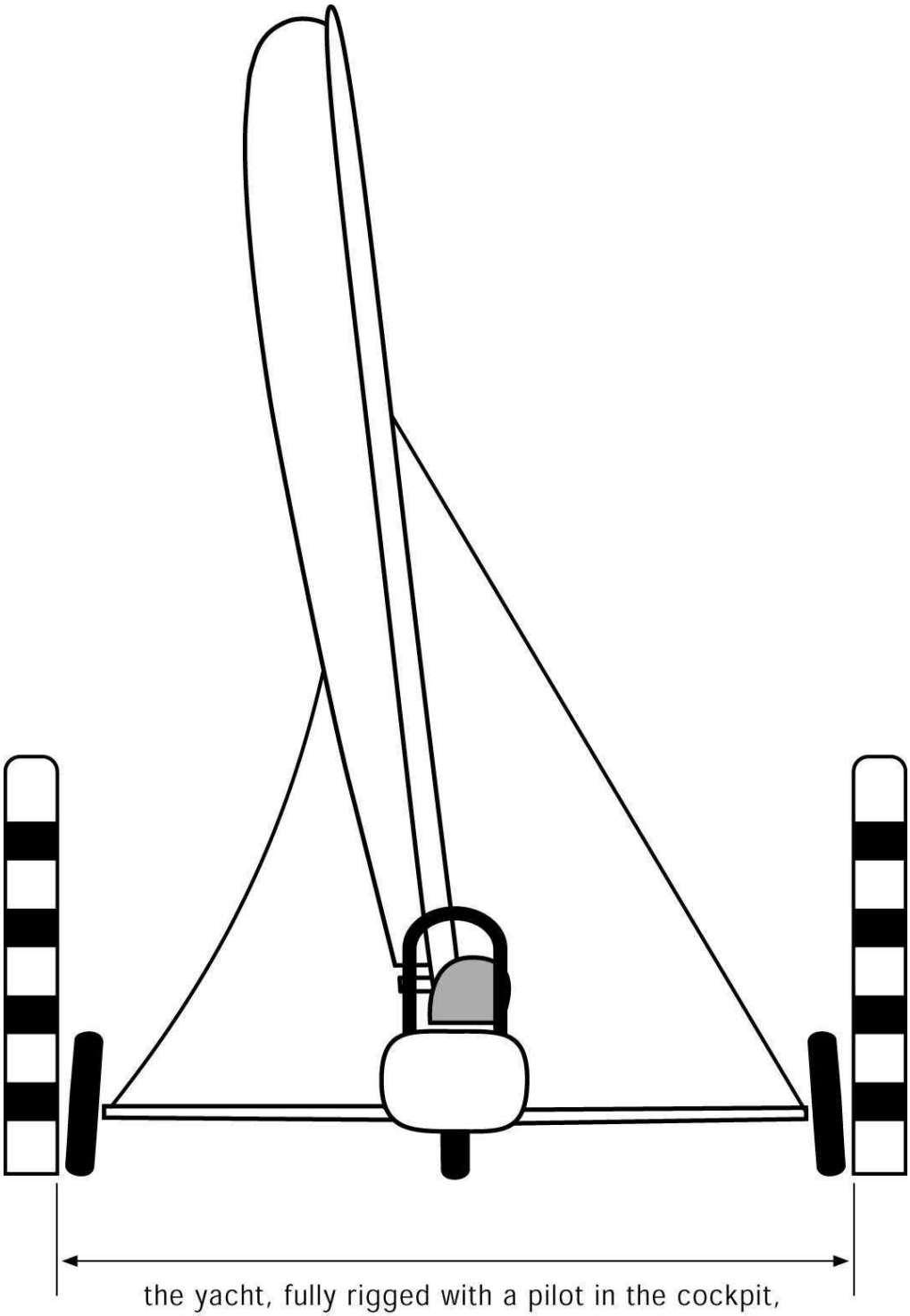

the yacht, fully rigged with a pilot in the cockpit, must pass between two vertical posts with a 3,5 m gap between them

ANNEX 02 B3 : CLASS 3 SPECIFICATION

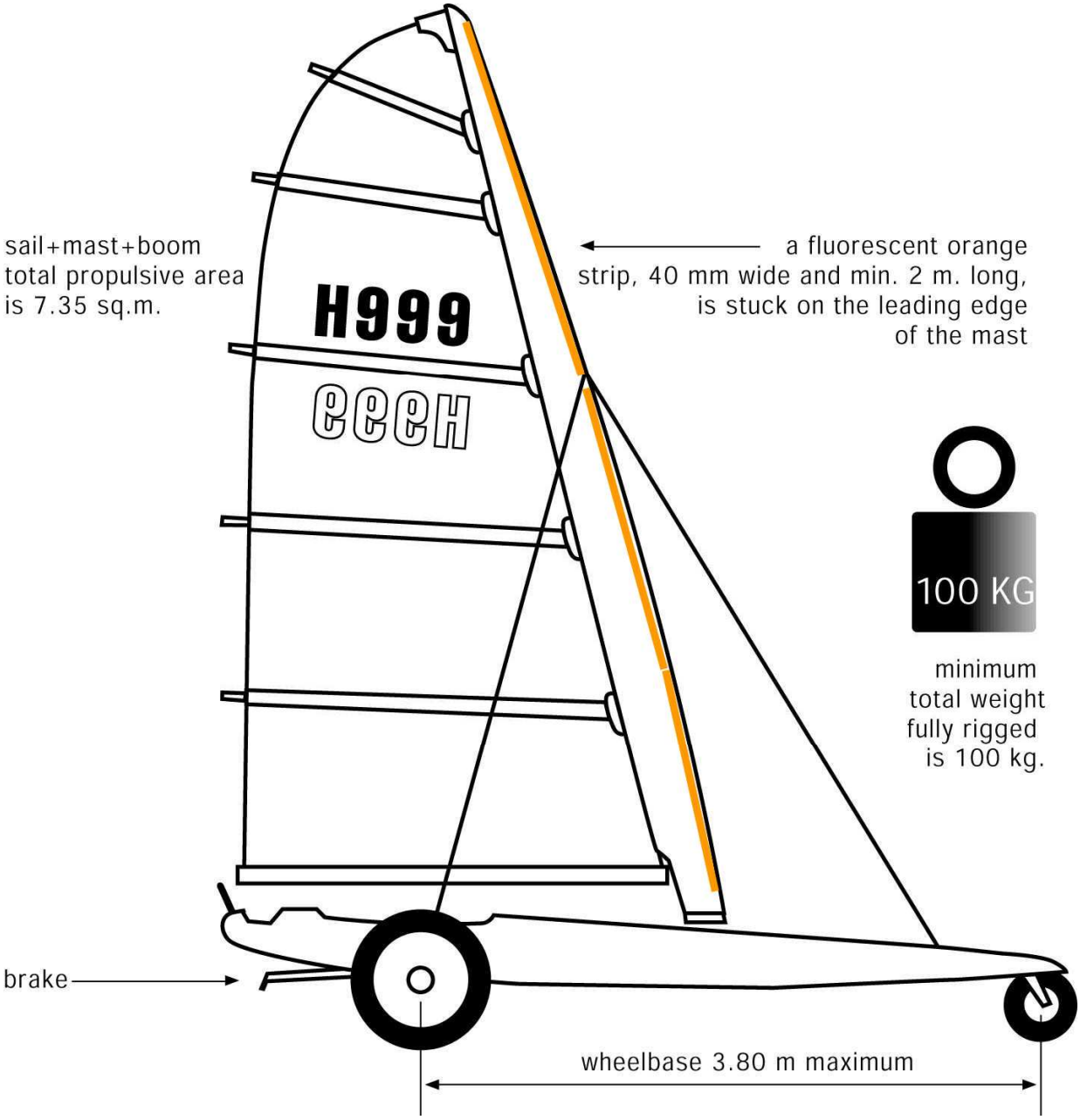

FISLY ANNEX n. 2 C 1

CLASS 5 SPECIFICATIONS.

Contrary to the 'article 1 (2) for annex n. 2 C only the English version is definitive.

BALLAST
The minimum weight of the fully rigged yacht is 50 kg.

BOOM
B1. The boom must be made of round section straight metal tube(s).
B2. The lowest point of the boom must never be able to come below :
or : 1/ 45 cm from the ground
or : 2/ eye level
whichever is highest.
There must be a device to make it impossible to sheet any part of the boom below this level.
A note of the minimum distance between the lowest point of the boom and the yacht is made for future checking and the position at which the measurement was made is marked on the yacht and the boom.
[1]

CHASSIS
C1. The width of the yacht should not exceed 2.00 M.
C2. The wheelbase of the yacht must not exceed 2.50 M.
C3. The chassis must be made of metal tubes, the section of which must be round, square or rectangular. Cables are forbidden, except for the stearing.
C4. Fairings are forbidden on the chassis. Inside and outside wheelcovers are allowed.
C5. Any wheel with wire spokes must be covered by internal and external wheelcovers.

MAST
M1. The mast must be made of round section metal tube, the outer diameter of which must not exceed 60 MM. At rest, the mast must be straight.
M2. The mast may be made from a maximum of four different diameter tubes, each tube must have a constant outer diameter and wall thickness over its full length. At each change of diameter, 3 CM are free to allow for chamfering or for protection of the mast pocket.
M3. The mast must be rigidly supported by an arrangement of metal tubes, all not higher than 1.20 M above ground level.
M4. The position of the mast must not be modifiable with the yacht in motion.
M5. The length of the mast shall be such that the distance from the top of the mast to its foot plus the distance from the mast foot to the ground shall not exceed 5.50 M.

SAIL
S1. The maximum profile area of the sail shall be 5.50 M2 . (...)
S2. The sail must be located onto the mast by means of a pocket.
S3. The internal circumference of the mast pocket must not exceed 240 MM (i.e. 120 MM long when laid flat).
S4. The sail must be free to rotate around the mast.
S5. The mast pocket must be made of sailcloth. Stiffeners, fairings or similar devices fitted inside or outside the mast pocket are prohibited.
S6. Fairings or similar devices fitted to the sail are prohibited.
S7. The sail may be modified by a device as follows :

1. Cunningham hole
2. Foot tensioner
3. Kicking strap
4. Batten tensioner line or leach line.

S8. The maximum width of the battens is 50 MM.

[1] F.G.A. 26/9/94

SEAT AND FOOTREST

SF1. The yacht must have : - a backrest and side-restraint for the pilot (and a passenger)
- a footrest

These accesoirs may be part of the seat. The seat may not contribute to the rigidity or the resistance of the chassis.

SF2. The foot-rest should present the pilots (and ev. passengers) feet inadvertantly touching the ground.

SF3. The external width of the seat may not be over 1.00 M.

SF4. The external length of the seat may not be over 2.50 M.

SF5. The front of the seat or footrest may not be further forward than the back of the mast.

SF6. Fairings that form part of the seat and extend no further than the limits of the seat are permissible. The shape of the seat must be such that the pilot's body is always fully exposed when viewed directly from above.

SF7. It shall not be possible to move the seat while the yacht is in motion.

SF8. Any sharp edges on the yacht must be made safe.

ANNEX 02 C 2

SPECIFICATIONS CLASS 5 PROMO

Class 5 Promo is accepted as an international Fisly class.
All measures of the tubes of the mast or the chassis must be taken either with the "imperial" or the "decimal" system. Both are allowed but cannot be mixed. [FGA 24/09/06]
The mix of Systems Units is forbidden in the 2 main parts of the yachts" (mast and yacht):
All the mast tube dimensions must be in Metric or in Imperial (not mixed)
All the chassis yacht tube dimensions must be in Metric or in Imperial (not mixed)
A yacht with Imperial Mast and metric chassis is allowed.
A yacht with metric Mast and imperial chassis is allowed.

A -- General specifications

1 - The maximum width of the PROMO fully rigged (with pilot in the yacht) is 2 m.
2 - The maximum wheelbase of the PROMO fully rigged is 2,50 m.
3 - The minimum weight of the PROMO fully rigged is 50 kg
4 - The maximum profile sail area shall be 5,50 m² measured according to the ISRR
5 - The maximum height of the mast of the PROMO is 5,5 m (measured from the ground, fully rigged, sheeted out, without the pilot)
6 - The wheel diameter of the PROMO is 400 x 8". The wheel rim shall be in moulded plastic or metal alloy.
7 - The minimum weight under the front wheel of the PROMO shall be 11 kg. It is measured with the sail sheeted in, pilot in the yacht, straight legs, the feet at a right angle with the legs.
8 - The PROMO shall have an effective brake.
9 - Fairings on the chassis, the axle tubes or wheels are forbidden.

B -- Chassis

B -1. Materials, dimensions

1 - The chassis is made of steel tubes. Exceptions are nuts, bolts, washers, axles, steering pivot, brake, foot pedal and support that can be made of stainless steel.
2 - The chassis is " T " or " Y " shaped. The minimum distance between the axle of the front wheel and the junction of the axle tube holders is 1,75 m (see plan, point " J ").
3 - The front part and the rear part are in a straight line and each consist of one tube. With the exception of the mast step and the axle tube holders, the front and the rear part are in a straight line in the horizontal and vertical plane.
4 - The tubes are welded with the exception that the axle tubes can be removed from the axle tube holders.
5 - The external diameter of the tubes is 0,065 m (tolerance 1%). The exception is the mast step of which the internal diameter is maximum 0,065 m.
6 - The tubes can only be adapted by compressing. Only the tubes of the front part and the axle tubes can be adapted by compressing. Part of these tubes shall be left round to measure its diameter.

B -2. The front part

1 - The steering is provided with a fork or a curved arm system:
With a curved arm system: the level of the wheel spindle is not modifiable. With a fork system : the fixation of the steering pivot has a direct contact or is welded to the front part
2 - The front part is not adjustable and is not equipped with a suspension system or stiffening.
3 - Steering cables are allowed.

B -3. The rear part, the mast step and the axle tube holders

The maststep and the axle tube holders are parts of the rear part. If the front part and the rear part tube have a different diameter they are welded.

B-3-1 The Mast step

1 - The maststep is a cylindrical tube having an internal diameter of maximum 0,065 m
2 - The maststep is welded onto the rear part
3 - The maximum height of the maststep measured in a straight and upright line is 0,60 m.
4 - The mast slides directly into the mast step without any wedge.
5 - The mast position in the mast step is not adjustable
6 - Welded metal plate may contribute to the strengthening of the mast step. On the front part this may not exceed 0,25 m measured horizontally from the external diameter from the mast step

B-3-2 The axle tube holders

1 - The axle tube holders are welded onto the rear part
2 - The axle tube holders are under the seat
3 - The maximum length of an axle tube holder measured from the junction of the axle tube holders (see plan point " J ") is 0,50 m
4 - No metallic piece crosses the straight line between the end of the axle tube holders (axis F on the plan).

B -4. The axle tubes

1 - Each axle tube consists of maximum two tubes
2 - Each axle tube consists of one entire external tube
3 - Each axle tube has one open end to make scrutineering possible
4 - Each wheel sindle holder is welded onto the axle tube
5 - Each axle is straight

C -- The seat

1 - The seat is made of fiberglass and polyester
2 - The shape is such that it holds the pilot well and that it protects him
3 - The shape is such that the pilot's body is entirely visible seen from the top of the mast
4 - The shape is such that the pilot's eyes are minimum 0,40 m from the ground (pilot in the yacht, straight legs and feet in a right angle with the legs)
When in sailing position the pilot's eyes are at a higher level than his feet and the highest point of the front part of the seat
5 - The seats maximum length is 2,50 m
6 - The seats maximum width is 1 m
7 - The most forward point of the seat is behind the mast step
8 - The seat is placed upon the chassis
9 - The tubes of the chassis shall not be visible in the shape of the seat
10 - The means of fixing of the seat may be metal plates welded on the chassis. They shall not cross the line of axis F
11 - The seat and its fixings do not contribute to the resistance and the rigidity of the chassis
12 - The position of the seat is not to be altered

D -- The Mast

1 - The mast is put together with round section straight aluminium tubes having a thickness of minimum 0,002 m
2 - The maximum external diameter of the mast tubes is 0,05 m
3 - The mast is made of 2 hollow parts (an upper part and a lower part. The lower part is made of maximum 3 different diameter tubes. Without tension the mast is rectilinear
4 - Four different diameter tubes are allowed to put together a mast. Each tube shall have a constant diameter over its total length. At each change of diameter, 0,03 m are free to allow for chamfering or for the protection of the mast pocket
5 - The mast wears a marking tape (minimum 0,003 m width) all round that is visible when sailing. The highest edge is situated at 0,55 m from the ground.

E -- The Boom

1 - The boom must be made of round section straight metal tube(s)
2 - The length of the boom is such that it crosses the vertical line through the most rearward point of the pilots helmet in sailing position

3 - The lowest point of the boom shall never be under 0,55 m measured from the ground.
When the pilot is in the yacht, straight legs and feet in a right angle with the legs, the highest point of the helmet shall always be under the boom.
The sheeting system must have a device that makes it impossible when sheeting in to bring any part of the boom under that level

4 - The sheeting system contains maximum 7 strings. The diameter of the sheave at the bottom of the groove of the sheave is less or equal than 0,006 m

5 - The fixing of the sheeting system to the chassis or the seat is not adjustable when sailing

F -- The sail

1 - The sail is made of polyester canvas type Dacron
The exception is that the leech may be strengthened using a strip of Mylar of a width of maximum 0,25 m.

2 - The sail shall be located onto the mast by means of a pocket

3 - The external circumference of the mast pocket must not exceed 0,24 m (or 0,12 m long when laid flat, measured on the stitching of the pocket)
The stitching of the pocket must close the pocket over its total length (so that the battens can not pass into the pocket)

4 - The sail must be free to rotate around the mast

5 - Stiffeners, fairings or similar devices fitted inside or outside the mast pocket are prohibited
Fairings or similar devices fitted onto the sail are prohibited

6 - The sail contains maximum 5 battens. The maximum width of each batten is 0,05 m.
Each batten is made of one piece in fiberglass and polyester

7 - The batten tensioners are straps or stings

8 - The top is made of straps or ropes

9 - The sail has maximum one eye on each end (tack, head and clew)

10 - The highest point of the sail shall not be higher than the top of the mast, when the sail is not sheeted in

11 - The maximum surface of the transparent window is 0,3 m²
The window must not be closer than 0,15 m from the strengthenings (= more than two layers of sailcloth)

12 - The luff may be adjusted with a Cunningham that is independent from the sheeting system

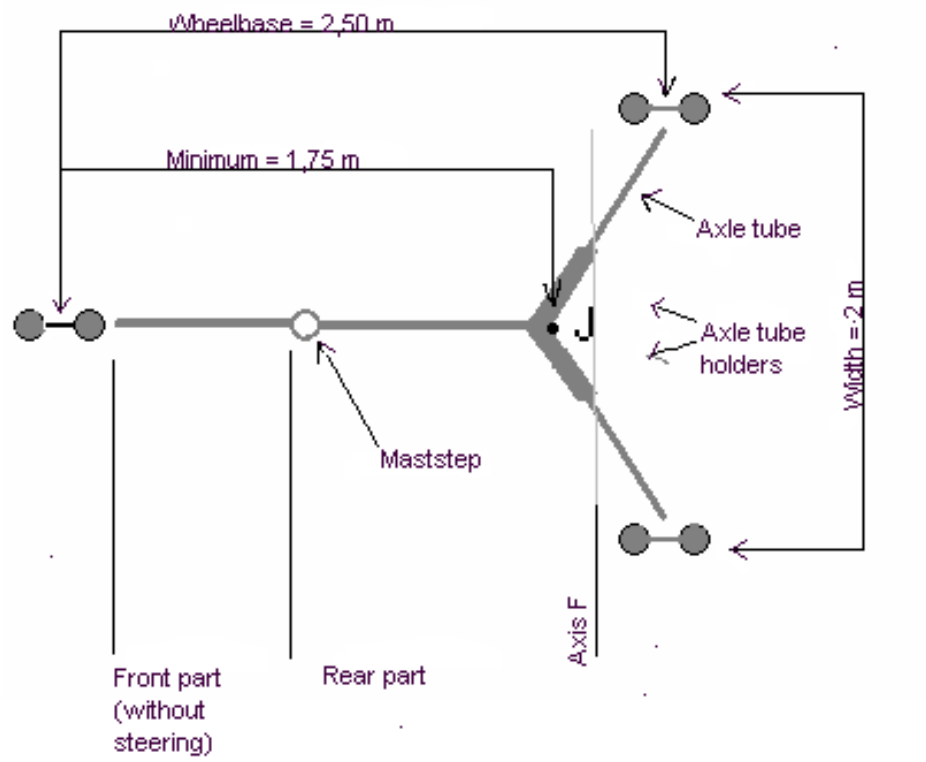

FISLY ANNEX n. 2 D

CLASS 7 SPECIFICATIONS

Any sand or land yacht which is sailed by a pilot standing upright, the rig of which will not remain upright unless the pilot is holding it, is considered to be a class 7.

FISLY ANNEX 2 E [FGA 24/10/08 and FCM 31/01/09]

See “Issa Standart Specifications Book” for additional drawings and pictures.

ANNEX 02 E

ISSA
International Standart Sailyachting Association
Association des Propriétaires de Char Standart

SPECIFICATIONS “STANDART”CLASS

If any of the points mentioned below is not strictly in compliance with what is stated and if the yacht and all its components* are not manufactured or supplied by the company “SEAGULL Chars à Voile” (or any entity that would replace it) then the yacht will not be considered as a "STANDART" international monotype.

**Except parts and supplies manufactured and/or provided by a company owning rights to the trademark or the product.*

1 The frame : (see annexes 1 to 5)

The frame number is stamped at the axles junction or on an metallic patch glued on the body.
Example : 09 96 S 200 : 09 = september / 96 = the year / S = Standart / 200 = the manufacturing Nber.

1/1 The width of the yacht must not exceed 2,64 M.
The length of the (half) alloy axle (aluminium tube) is 115 cm.

1/2 The total length of the yacht is 4,12 M.

1/3 Freedom of choice for rear tires (slick or design) from recognized trade marks and of dimensions 2-1/4 x 17” to 3 x 17”. These tires are mounted on Grimeca rim / alloy wheel (5 double battons 1,6 x 17” reference Peugeot/Grimeca 733642 or a 3 double battons (propeller design) Grimeca 17 = reference 722784 QZ. Freedom of choice for front tires from recognized trade marks and of dimensions 400 X 8. These tires are mounted on a front wheel full nylon with a double-arm fork.

1/4 Placement of binding straps secured at 3 places on the steering axle (at meeting point with the stick, with the inspection hatch and with the fork (see photo 5).

1/5 The minimum weight of the complete rigged yacht is 70 kg.

2 The sail : (see annex 7)

The sail surface is measured as explained in appendix 3,A2 of the R.I.R.I.C. and cannot exceed 5,8 sqM, put in flat, not rigged – with a tolerance of +/- 0,05 sqM. The logo “Standart” is located on the top of the sail, between the 4th and the 5th sail battens. The letter of the country membership is located between the 3rd and 4th battens on each side of the sail.
The international sail number corresponding to the manufacturing number is located between the 1st and 2nd battens (side starboard above). The “S” letter is red (color) and the numbers are black. The sail battens must be Aquabatten (trade mark) 16 mm (HC16) pre-shaped. The battens compression scews are 40 mm from Electrosheen (trade mark). Only sails made by the companies SEAGULL and OMEGA SAILS (or all other legal authority that may have replaced it) are authorized.

3 The mast : (see annex 8)

The two existing lenghts are : from 1990 to december 94 : 541 cm. And since 01/95 : 544 to 545 cm.
(See the plans in the chapter : Monotype / changings in every details).

4 The boom : (see annex 9)

The boom is 48 mm diameter, 2 meters long until end 1994. Since 01/95 the boom is 50 mm diam, 2 meters long. The “goose neck” is entered easily by hand into the front of the boom. The main sheet has a diam of 10-12 mm. Freedom of choice to add to the front of the boom an eye bolt, and to the end of the boom a clam-cleat block.

5 Pulleys : (see photo 12)

Freedom choice of 6 single blocks (with or without balls) - diam of max 45 mm from recognized trade marks. Freedom of choice of a winch pulley without block and a diam of max 60 mm from recognized trade marks. All these pulleys are attached by 5 to 6mm ropes.

6 Authorized adjustments :

- Tires pressure,
- Footbar adjustment,
- Width of the yacht with the 2 axles,
- Rear wheels parallelism,
- Rear wheels angle / Slope,
- Height of the sail,
- Position of the sail on its boom,
- Shape and compression on the battens,
- Attachment of the Lacing-up of the pulleys till the popped ring at the back of the boom.

7 Authorized options :

- Padding imitation leather or ergonomic form (froth rubber) at the pilot’s choice.
- Placing two pedals on the pedalboard (see photo 7)

8 Photos : 1 to 17 (see annexes 10/11/12)

FISLY ANNEX 2 F [1]

CLASS 8 SPECIFICATIONS

ART. 1 PARAKART (GENERALITIES)

1.1 Definition
Parakart is a vehicle with at least two wheels powered by a kite.
The kite is controlled by the pilot but it's not fixed to the parakart.

1.2 The Pilot
The pilot must be sitting or lying on the parakart steering it.
The pilot must not be enclosed by the structure of the parakart and cannot anyway be fastened to it.
Foot straps are allowed on foot pegs but they must be flexible and not metallic made.
The stoppers on the foot peg must be rounded with no sharp corners.
A fluorescent tape must be put on the rear axle of all buggies of pilots under 16 years old [3]
The pilot must be able to be lifted from the parakart vertically by their harness attainment when in their normal driving position. [4]

1.3 The Brake
The brake system for the parakart must be a wind brake done by the kite.

ART. 2 DIMENSIONS

2.1 Length
3,5 meters maximum long, all included

2.2 Width
3 meters maximum large, all included

2.3 Wheels
The wheels cannot be bigger than **27 inches** diameter, included the pneumatic inflated at 2 bars, there are not restriction to the width of the pneumatics. **[3]**
Spoked wheel of any type (e.g. spoked or moulded) must be covered. Covers may extend no more than 1 cm from the outside of the hub and reach no less than 3 cm from the inside of the rim.
Regardless of the type of wheel a pole of 3 cm diameter must not be allowed to pass through a wheel**.[2]**

2.4 Direction
There are not limitations to the angle of turn.

2.5 Lest
It's allowed to add weights on the parakart, the maximum add on weight allowed is **5 kilograms**, the add on weight must have a rounded shape without sharp corners. **Full metal buggy parts are not allowed as additional weight nor can parts be filled with any kind of material to be used as lest. Additional parts that have no use for the construction of the buggy are not allowed. [3]**
The add on weights put on the parakart cannot be movable while the parakart is in motion.
No additional weights are allowed put on the pilot.

2.6 Buggy Weight [4]
The maximum weight of the parakart is 60 kg in any combination which may include a maximum of 5 kg of weight.

[1] F.G.A. 19/09/99 [2] F.G.A. 19/09/04 [3] F.G.A. 16/09/07 [4] FGA 20/09/09

ART. 3 KITES AND LINES

3.1 Lines Definition

Fly lines are those lines that connect the handles to the bridle system of the kite.

3.2 Connection

The fly lines must be directly connected to the handles and the kite, with nothing between.

3.3 Length Lines

The length is measured between the handles and the back of the last kite, the maximum length allowed is 50 meters.

3.4 Material

Under no circumstances is Kevlar (metallic or similar) to be allowed as a part of the flying lines. This type of material may be used in bridles and in the construction of the kite fabric. No more than 30 cm of this type of material (sleeved) may be used in the lead lines.
Any pilot found to be using Kevlar as any part of his flying lines will be ejected form the competition immediately**. [1]**

ART. 4 PILOT EQUIPMENT

Harness system must be of the opened type (for example : wind surf hook) or with a mechanical quick release system on it. It must be a non captive harness system.

ART. 5. IDENTIFICATION NUMBERS

Identification numbers are to be mounted on each side and on the rear of the Parakart, side numbers must be mounted vertically and all numbers plates must be clearly visible. The mount for identification must be constructed from a flat solid material. Identification must be mounted on a white background. Identification numbers must be at least 14 cm high, 5 cm across and 2 cm thick. Both letters and numbers must be of a non-script font (e ;g ; Helvetica) and letters must be all capitals. The identificaiton letter for the pilots' Country must immediately precede the numbers. Numbers must not touch and there must be a minimum 1 cm border between the identification and any additional decals or decoration. **[1]**

[1] F.G.A. 19/09/04